ORIGINAL PERFORMANCE

Garrett® Flange Diagram **G25-550 | G25-660**

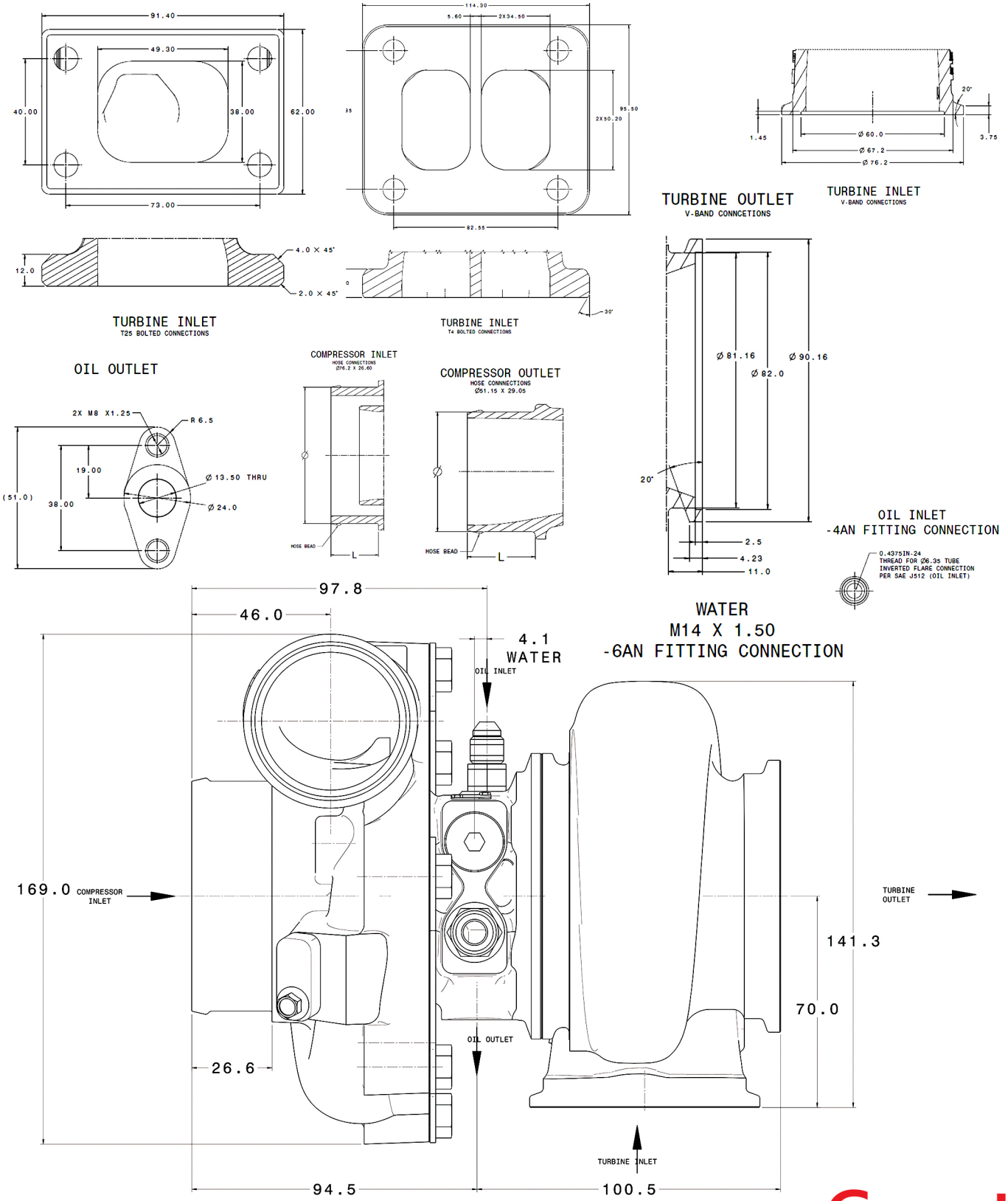

© 2018 Garrett Motion Inc.